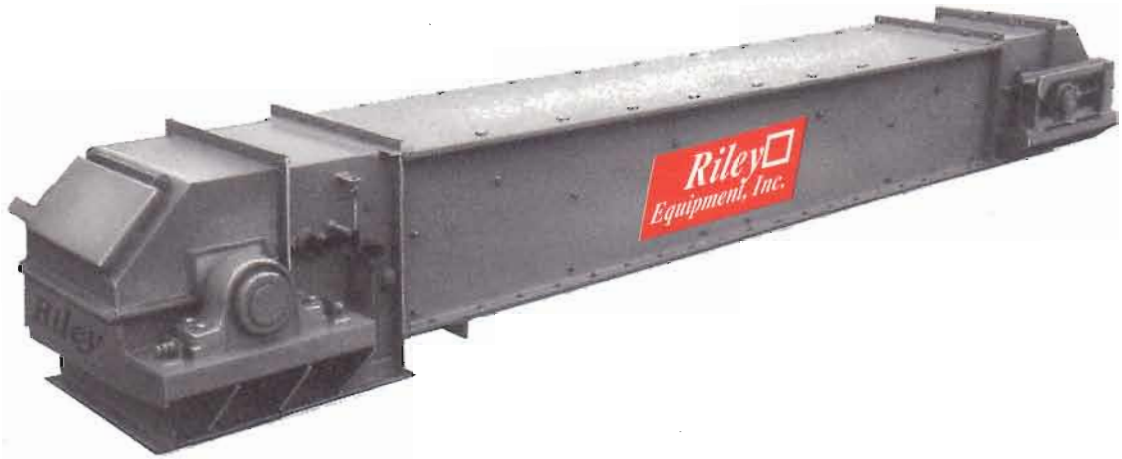

Sur-Flo Drag Conveyors

Sur-Flo Features

- Flanged trough cover constructed of 12 ga. HRS for extra strength and to provide a dust tight and weatherproof seal.

- Hinged inspection door in tail section with rubber gasket seal.

- Head and tail sections have removable covers and lift out shaft assembly to allow easy access to maintenance areas. Head and tail sections are constructed of 1/4" plate.

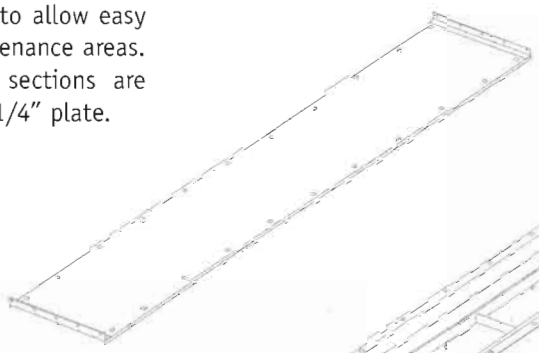

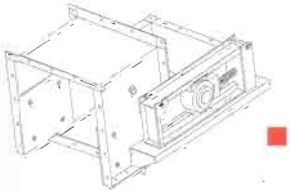

- Tail section center pull take-up with hinged guide designed for easy removal. Wide slot center take-up spherical bearings.

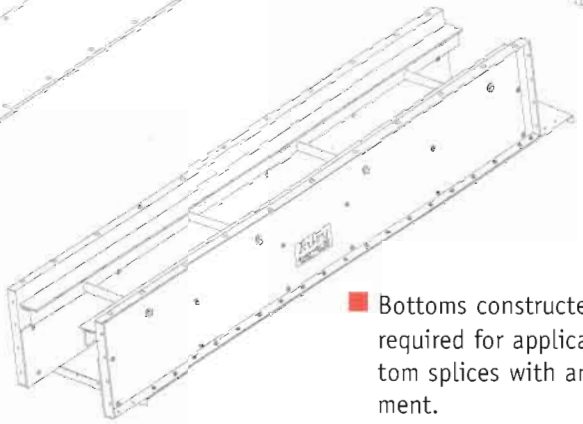

- Bottoms constructed of abrasion resistant steel as required for application. Troughs have offset bottom splices with angle flanges for accurate alignment.

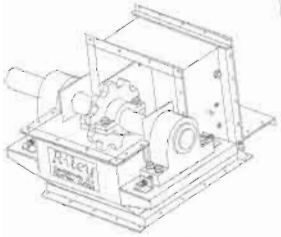

- 10 ga. trough side construction with up to 3/8" thick bolted abrasion resistant steel liner.

- Chain return rails are lined with 1/4" 400 Brinnel abrasion resistant steel. Rails are 2" wide through 16 x 20 models and 4" wide on 20 x 20 models and larger.

- Head and tail sections have UHMW shaft seals. Tail section utilizes a sliding UHMW seal.

- Standard inlet.

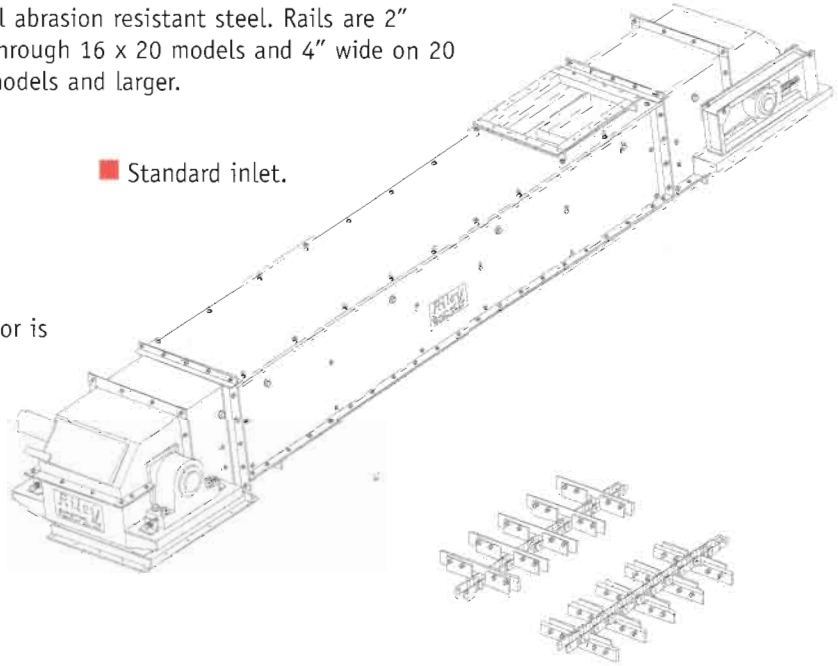

- Turned, ground and polished shafts constructed of #1045 steel. Tail shafts are drilled and tapped for optional motion monitor.

- Chain slack detector is optional.

- Flame cut, keyed, lift out, split walking tooth sprocket with hardened rim.

- Hinged head relief and inspection door with rubber gasket seal. Automatic shut-off switch is optional.

- Heavy-duty double roller pillow block bearings with L-10 life of 60,000 hours minimum.

- Tall flight, divided box, stainless steel and gas tight models available-consult Engineering Department.

- Roller bushed or welded steel chains are available to suit the application. 1/2" thick UHMW flights avoid steel on steel contact and are mounted at a 10° forward pitch for optimum performance.

Sur-Flo Specifications

Model Size	Units	Chain Speed Feet Per Minute						
		50	75	100	125	150	175	200
12 x 20	BPH	2460	3680	4920	6140	7360	8600	9840
	CFH	3070	4600	6140	7670	9210	10750	12280
16 x 20	BPH	3310	4970	6620	8280	9940	11590	13240
	CFH	4130	6210	8270	10350	12420	14480	16550
20 x 20	BPH	4160	6250	8330	10420	12500	14590	16660
	CFH	5200	7810	10410	13020	15620	18230	20820
26 x 20	BPH	5450	8170	10900	13620	16350	19070	21800
	CFH	6810	10210	13620	17020	20430	23830	27250
26 x 26	BPH	7870	11810	15740	19680	23620	27550	31490
	CFH	9830	14760	19670	24600	29520	34430	39360
32 x 26	BPH	9720	14580	19450	24310	29170	34040	38900
	CFH	12150	18220	24310	30380	36460	42550	48620
38 x 26	BPH	11570	17360	23150	28940	34730	40520	46300
	CFH	14460	21700	28930	36175	43410	50650	57870

**Capacities based on whole grains @ 15% moisture and a level conveyor. Sizes shown are most economical to manufacture, but other heights and widths are available to suit project requirements.*

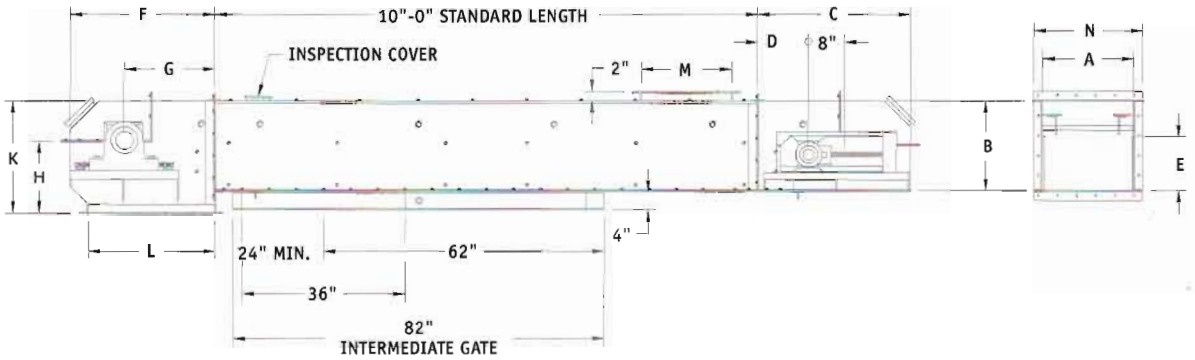

Model	A	B	C	D	E	F	G	H	K	L	M	N
12 x 20	12	20¼	36	15	12	32	20	14½	25¼	28	20	16¼
16 x 20	16	20¼	36	15	12	32	20	14½	25¼	28	20	20¼
20 x 20	20	20¼	36	15	12	32	20	14½	25¼	28	20	24¼
26 x 20	26	20¼	36	15	12	32	20	14½	25¼	28	20	30¼
26 x 26	26	26¼	38	16	18	34	21	17½	31¼	30	24	30¼
32 x 26	32	26¼	38	16	18	34	21	17½	31¼	30	24	36¼
38 x 26	38	26¼	38	16	18	34	21	17½	31¼	30	24	42¼

All dimensions and specifications subject to change without notice.

Sur-Flo Features

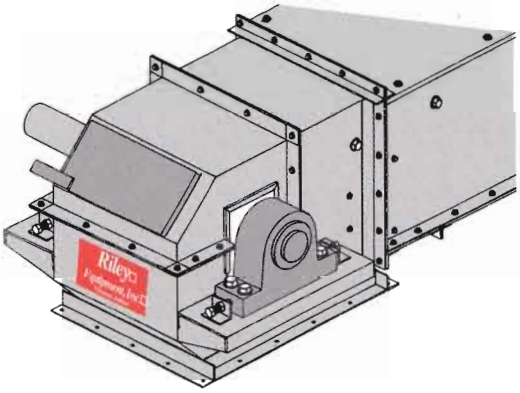

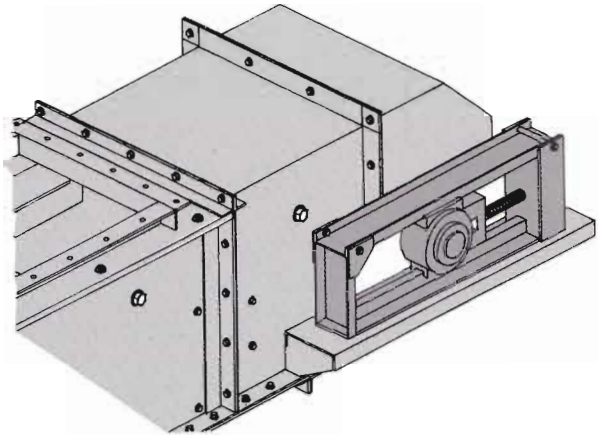

- Head Section With Removable Cover And Heavy-Duty Pillow Block Roller Bearings

- Tail Section With Removable Cover And Heavy-Duty Wide Slot Take-Up Bearings

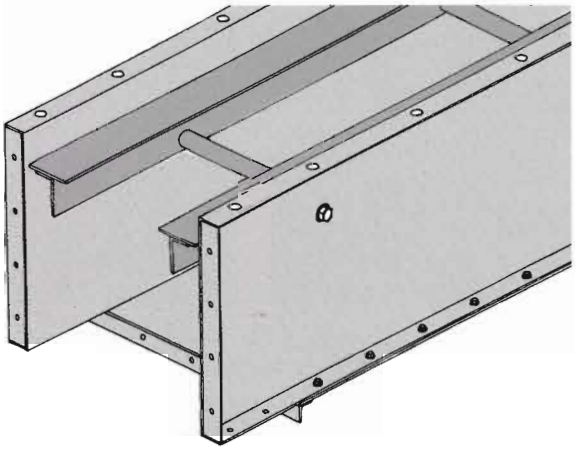

- Return Rail System With Abrasion Resistant Rails

- Abrasion Resistant Side Liner And Bottom

Riley Equipment Manufactures A Complete Line of Bulk Material Handling Equipment . . .

■ Bucket Elevators ■ Distributors ■ Screw Conveyors ■ Incline Drag Conveyors ■ Super Incline Drag Conveyors ■ Easy-Flo Drag Conveyors ■ Sur-Flo Drag Conveyors ■ Spouting & Accessories ■ Centrifugal & Continuous Industrial Bucket Elevators ■

For equipment designed to your specifications contact our Engineering Department.

Riley Equipment, Inc.
P.O. Box 435
2205 S. Old Decker Road
Vincennes, Indiana 47591-0435

Website: www.rileyequipment.com
E Mail: sales@rileyequipment.com
Phone: (812) 886-5500
Fax: (812) 886-5515

#104A02