Easy-Flo Drag Conveyors

Easy-Flo Features

- Head and tail section pillow block bearings accurately sized for maximum radial loads, extended life, and easy maintenance.
- Bolted flanged cover with tee shaped top splice provides extra strength and dust tight weatherproof seal.
- Tension type screw take-up for more durable service.
- UHMW return rollers 2" dia. thru 17" models with 3/4" dia. shaft, 3" dia. rollers with 1" dia. shaft on 20" models. Shafts bolted to trough for easy maintenance and replacement. Return rail system on 26 x 20 models and larger.
- Tail baffle prevents material roll-back into sprocket area.

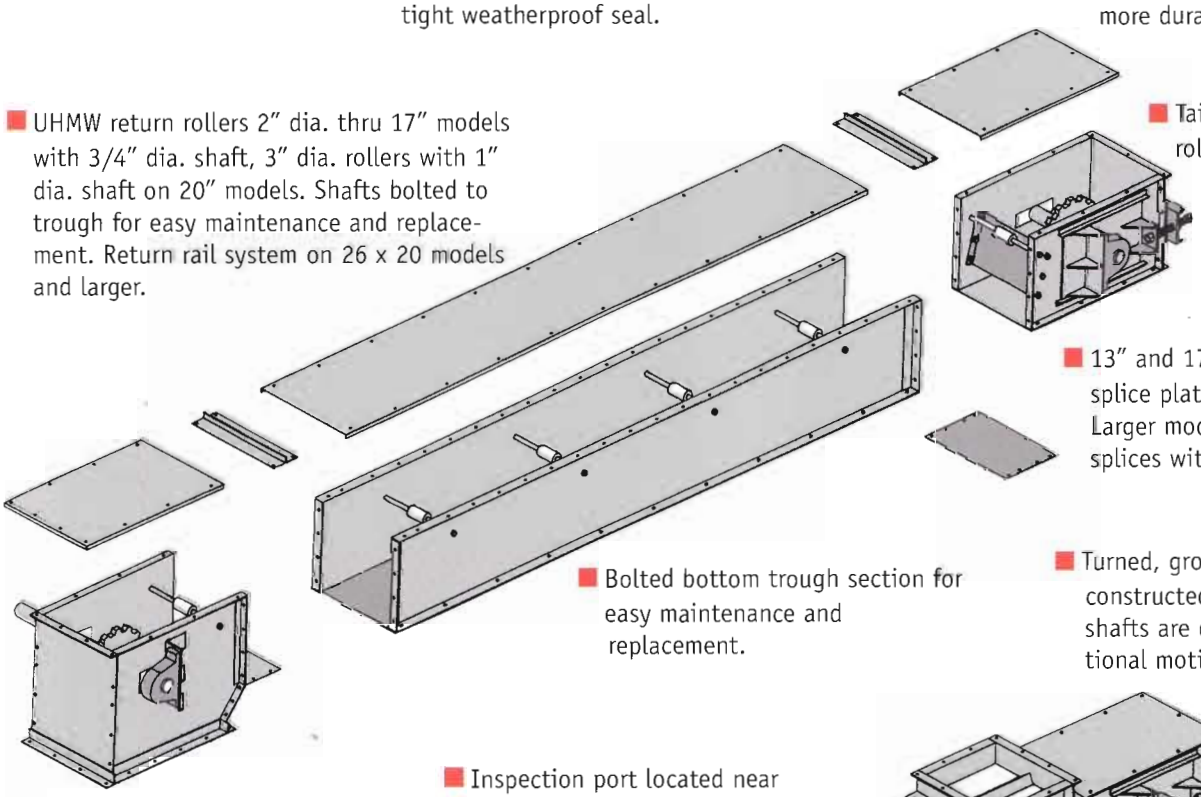

- 13" and 17" models have bottom splice plates for accurate alignment. Larger models have offset bottom splices with angle flanges.
- Bolted bottom trough section for easy maintenance and replacement.
- Turned, ground, and polished shafts constructed of #1045 steel. Tail shafts are drilled and tapped for optional motion monitor.
- Inspection port located near the head section for visual check of conveyed material.
- All head, tail, and trough sections are shipped fully assembled for fast field installation.

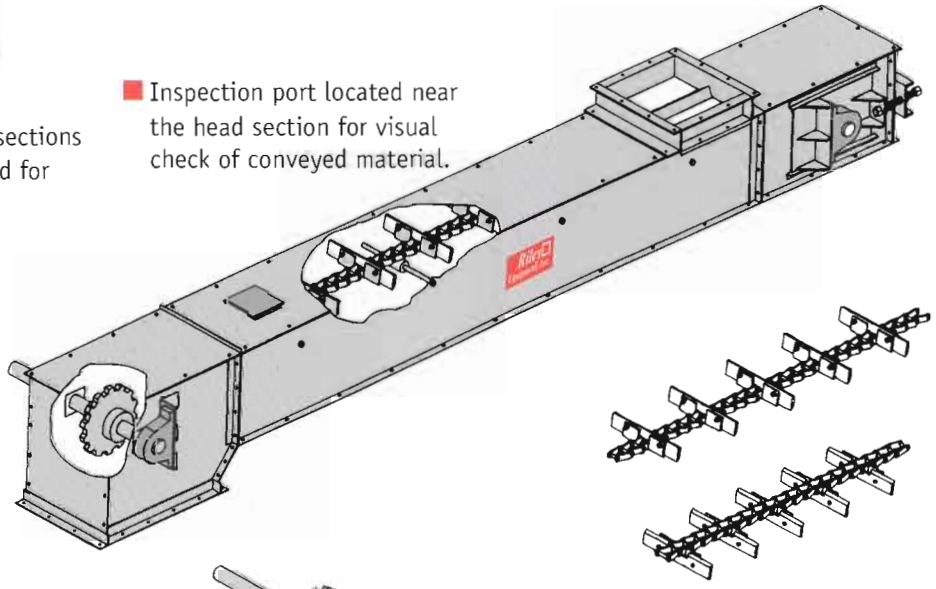

- Dust tight and weatherproof UHMW seals on head and tail shafts.

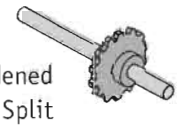

- Flame cut steel, hardened rim C-hub sprocket. Split Sprocket optional.
- All steel chain engineered and designed for each specific conveyor for extended life and maximum working loads. Chain is either welded steel or roller bushed style.
- UHMW flights prevent steel to steel contact and are set at a 10° forward pitch for maximum performance. Flights are 1/2" thick on all models. Flights are factory bolted to chain for easy installation.

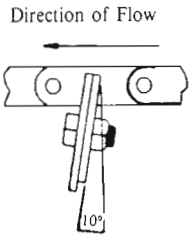

10 Degree Forward

- Colored flights mark cottered section on chain for quick location and easy maintenance.

Easy-Flo Specifications

Model Size	Capacity BPH	Capacity CFH	FPM	RPM	Trough Type	Standard Construction Guage Head	Tail	Bottom	Side
7 x 13	2,000	2,500	126	57	I	10	10	12	12
	2,500	3,125	158	72					
	3,000	3,750	189	86					
9 x 17	3,000	3,750	95	31	I	10	10	10	10
	4,000	5,000	126	41					
	5,000	6,250	158	51					
	6,000	7,500	189	61					
12 x 17	6,000	7,500	142	46	I	10	10	10	10
	7,000	8,750	165	53.5					
	8,000	10,000	189	61					
16 x 17	8,000	10,000	142	46	I	10	10	10	10
	9,000	11,250	160	52					
	10,000	12,500	177	57					
16 x 20	10,000	12,500	154	45	I	1/4" PL	10	7	10
	12,000	15,000	185	55					
20 x 20	10,000	12,500	123	36	I	1/4"PL	10	7	10
	15,000	18,750	185	55					
26 x 20	15,000	18,750	142	42	II	1/4"PL	10	1/4"PL	10
	20,000	25,000	189	56					
26 x 26	25,000	31,250	173	34	II	1/4"PL	1/4"PL	1/4"PL	10
32 x 26	30,000	37,500	169	33	II	1/4"PL	1/4"PL	1/4"PL	10
32 x 32	40,000	50,000	161	26	II	1/4"PL	1/4"PL	3/8"PL	10

**Capacities based on whole grains @ 15% moisture and a level conveyor. Sizes shown are the most economical to manufacture, but other heights and widths are available to suit project requirements.*

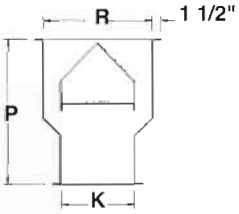

By-Pass Hopper Section

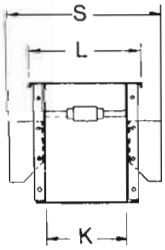

Trough Section Type I

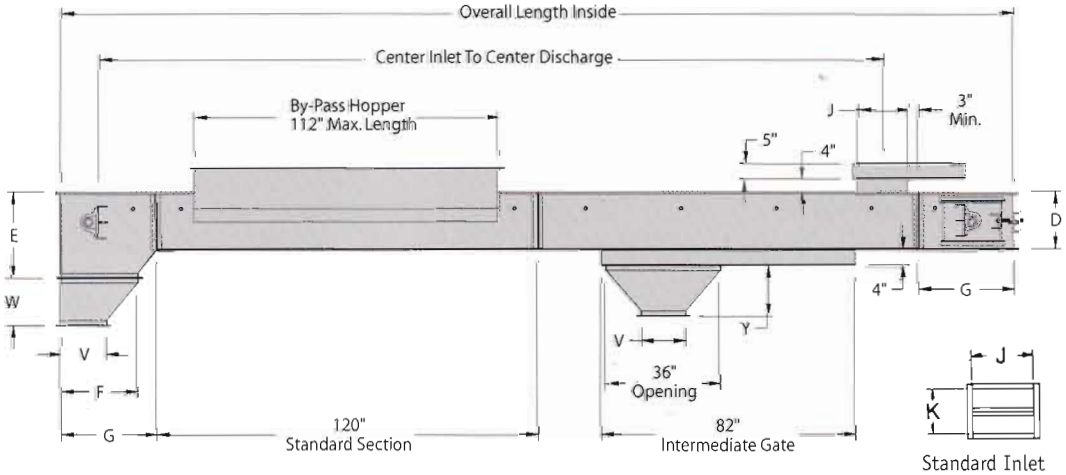

Standard Inlet

Trough Section Type II

Model	D	E	F	G	J	K	L	P	R	S	V	W	Y
7 x 13	13 1/4	20 3/4	18	24	12	7	11	18	13	16 3/4	8	15	17 1/2
9 x 17	17 1/4	24 3/4	24	30	15	9	13	23	15	18 3/4	10	19 1/2	16 1/2
12 x 17	17 1/4	24 3/4	24	30	18	12	16	24	18	21 3/4	12	17	15 1/2
16 x 17	17 1/4	24 3/4	24	30	16	16	20	26	22	25 3/4	14	15	14 1/2
16 x 20	20 1/4	28 1/4	24	30	16	16	21	29	22	26 1/4	14	15 1/2	14 1/2
20 x 20	20 1/4	28 1/4	24	30	20	20	25	31	26	30 1/4	16	13 1/2	14
26 x 20	20 1/4	28 1/4	24	30	20	26	31	34	34	36 1/4	18	11	13
26 x 26	26 1/4	34 1/4	30	36	20	26	31	40	34	36 1/4	20	16	12
32 x 26	26 1/4	34 1/4	30	36	20	32	37	43	42	42 1/4	20	16	12
32 x 32	32 1/4	40 1/4	30	36	20	32	37	49	42	42 1/4	24	13 1/2	10

Easy-Flo Options

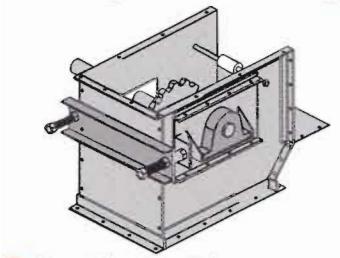

- Head Section Take-up

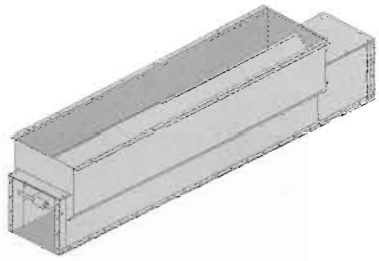

- By-Pass Inlet Hopper

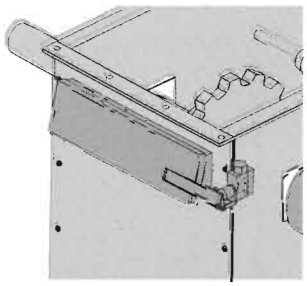

- Head Relief Door

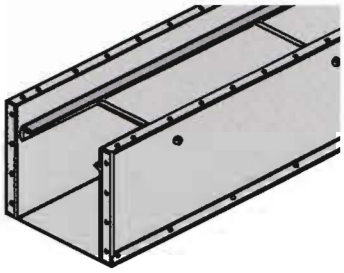

- Return Rail System

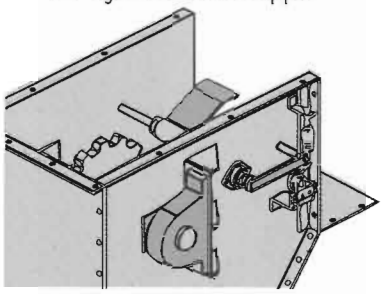

- Chain Slack Detector

- Abrasion Resistant Steel Bolted Side Liner

Control Gates

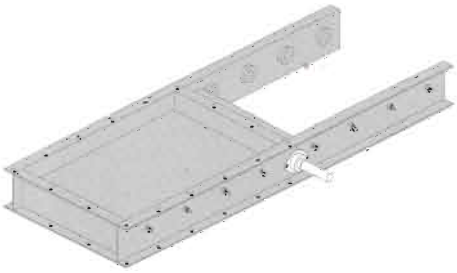

- Manual Rack & Pinion Gate

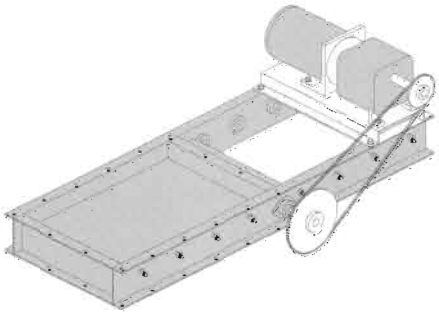

- Electric Rack & Pinion Gate

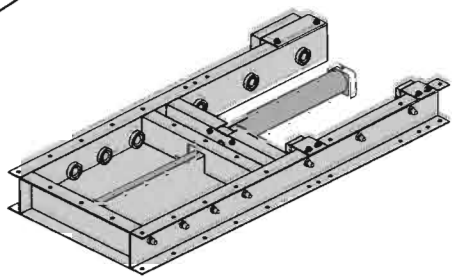

- Hydraulic or Pneumatic Slide Gate

Riley Equipment Manufactures A Complete Line of Bulk Material Handling Equipment . . .

■ Bucket Elevators ■ Distributors ■ Screw Conveyors ■ Incline Drag Conveyors ■ Super Incline Drag Conveyors ■ Easy-Flo Drag Conveyors ■ Sur-Flo Drag Conveyors ■ Spouting & Accessories ■ Centrifugal & Continuous Industrial Bucket Elevators ■

For equipment designed to your specifications contact our Engineering Department.

Riley Equipment, Inc.
2205 S. Old Decker Road
P.O. Box 435
Vincennes, IN 47591-0435

Website: www.rileyequipment.com
E Mail: sales@rileyequipment.com
Phone: (812) 886-5500
Fax: (812) 886-5515

#102A02

Easy-Flo Specifications

Model Size	Capacity BPH	Capacity CFH	FPM	RPM	Trough Type	Standard Construction Guage Head	Tail	Bottom	Side
7 x 13	2,000	2,500	126	57	I	10	10	12	12
	2,500	3,125	158	72					
	3,000	3,750	189	86					
9 x 17	3,000	3,750	95	31	I	10	10	10	10
	4,000	5,000	126	41					
	5,000	6,250	158	51					
	6,000	7,500	189	61					
12 x 17	6,000	7,500	142	46	I	10	10	10	10
	7,000	8,750	165	53.5					
	8,000	10,000	189	61					
16 x 17	8,000	10,000	142	46	I	10	10	10	10
	9,000	11,250	160	52					
	10,000	12,500	177	57					
16 x 20	10,000	12,500	154	45	I	1/4" PL	10	7	10
	12,000	15,000	185	55					
20 x 20	10,000	12,500	123	36	I	1/4"PL	10	7	10
	15,000	18,750	185	55					
26 x 20	15,000	18,750	142	42	II	1/4"PL	10	1/4"PL	10
	20,000	25,000	189	56					
26 x 26	25,000	31,250	173	34	II	1/4"PL	1/4"PL	1/4"PL	10
32 x 26	30,000	37,500	169	33	II	1/4"PL	1/4"PL	1/4"PL	10
32 x 32	40,000	50,000	161	26	II	1/4"PL	1/4"PL	3/8"PL	10

**Capacities based on whole grains @ 15% moisture and a level conveyor. Sizes shown are the most economical to manufacture, but other heights and widths are available to suit project requirements.*

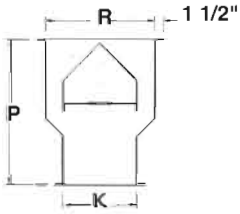

By-Pass Hopper Section

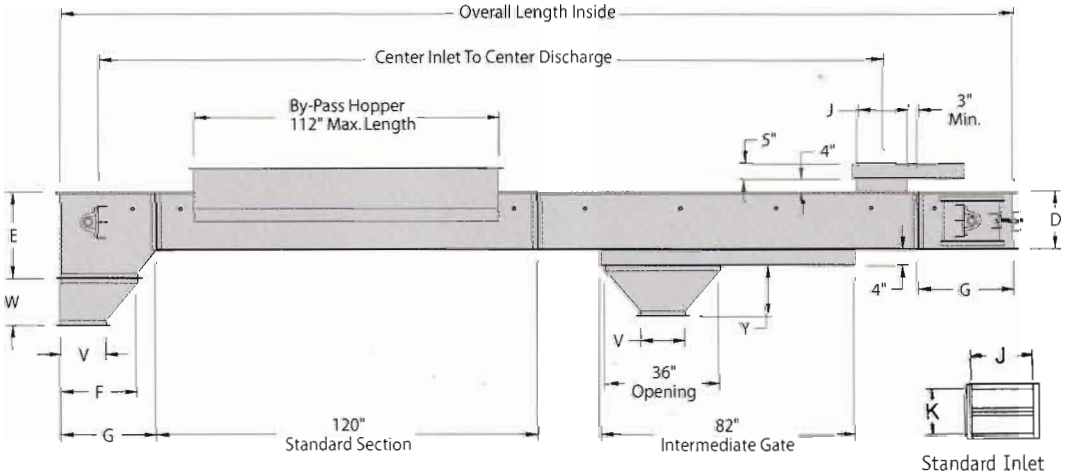

Standard Inlet

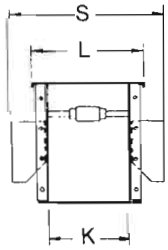

Trough Section Type I

Trough Section Type II

Model	D	E	F	G	J	K	L	P	R	S	V	W	Y
7 x 13	13 1/4	20 3/4	18	24	12	7	11	18	13	16 3/4	8	15	17 1/2
9 x 17	17 1/4	24 3/4	24	30	15	9	13	23	15	18 3/4	10	19 1/2	16 1/2
12 x 17	17 1/4	24 3/4	24	30	18	12	16	24	18	21 3/4	12	17	15 1/2
16 x 17	17 1/4	24 3/4	24	30	16	16	20	26	22	25 3/4	14	15	14 1/2
16 x 20	20 1/4	28 1/4	24	30	16	16	21	29	22	26 1/4	14	15 1/2	14 1/2
20 x 20	20 1/4	28 1/4	24	30	20	20	25	31	26	30 1/4	16	13 1/2	14
26 x 20	20 1/4	28 1/4	24	30	20	26	31	34	34	36 1/4	18	11	13
26 x 26	26 1/4	34 1/4	30	36	20	26	31	40	34	36 1/4	20	16	12
32 x 26	26 1/4	34 1/4	30	36	20	32	37	43	42	42 1/4	20	16	12
32 x 32	32 1/4	40 1/4	30	36	20	32	37	49	42	42 1/4	24	13 1/2	10

Easy-Flo Options

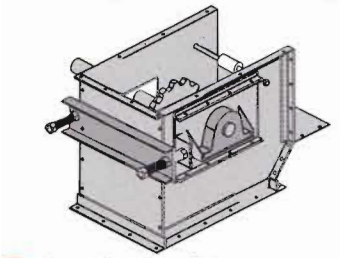

- Head Section Take-up

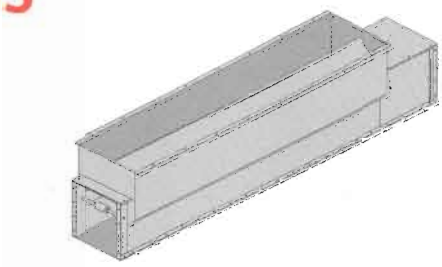

- By-Pass Inlet Hopper

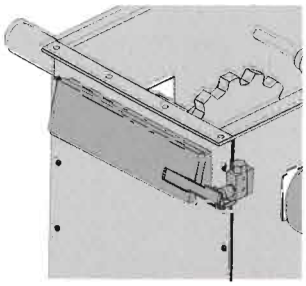

- Head Relief Door

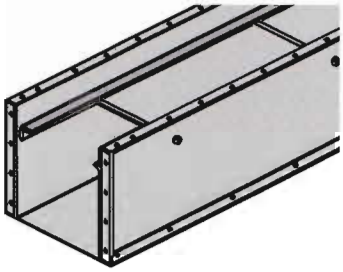

- Return Rail System

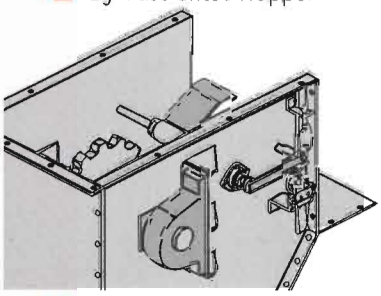

- Chain Slack Detector

- Abrasion Resistant Steel Bolted Side Liner

Control Gates

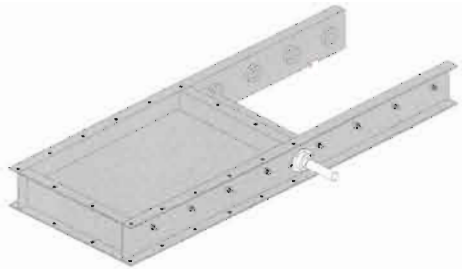

- Manual Rack & Pinion Gate

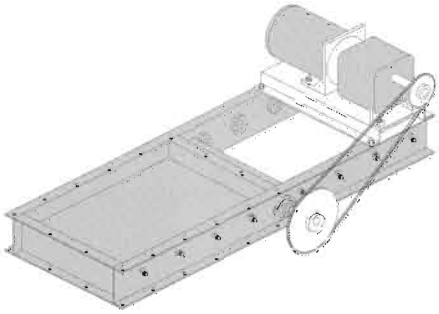

- Electric Rack & Pinion Gate

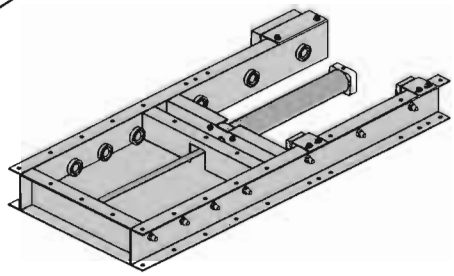

- Hydraulic or Pneumatic Slide Gate

Riley Equipment Manufactures A Complete Line of Bulk Material Handling Equipment . . .

■ Bucket Elevators ■ Distributors ■ Screw Conveyors ■ Incline Drag Conveyors ■ Super Incline Drag Conveyors ■ Easy-Flo Drag Conveyors ■ Sur-Flo Drag Conveyors ■ Spouting & Accessories ■ Centrifugal & Continuous Industrial Bucket Elevators ■

For equipment designed to your specifications contact our Engineering Department.

Riley Equipment, Inc.
2205 S. Old Decker Road
P.O. Box 435
Vincennes, IN 47591-0435

Website: www.rileyequipment.com
E Mail: sales@rileyequipment.com
Phone: (812) 886-5500
Fax: (812) 886-5515

#102A02